ORIGINAL INSTRUCTIONS

S/N: 1459 AND ABOVE
PLEASE CONTACT GAGE BILT FOR ALL OTHER SERIAL NUMBERS.

GB2628/GB2628A
INSTALLATION TOOL

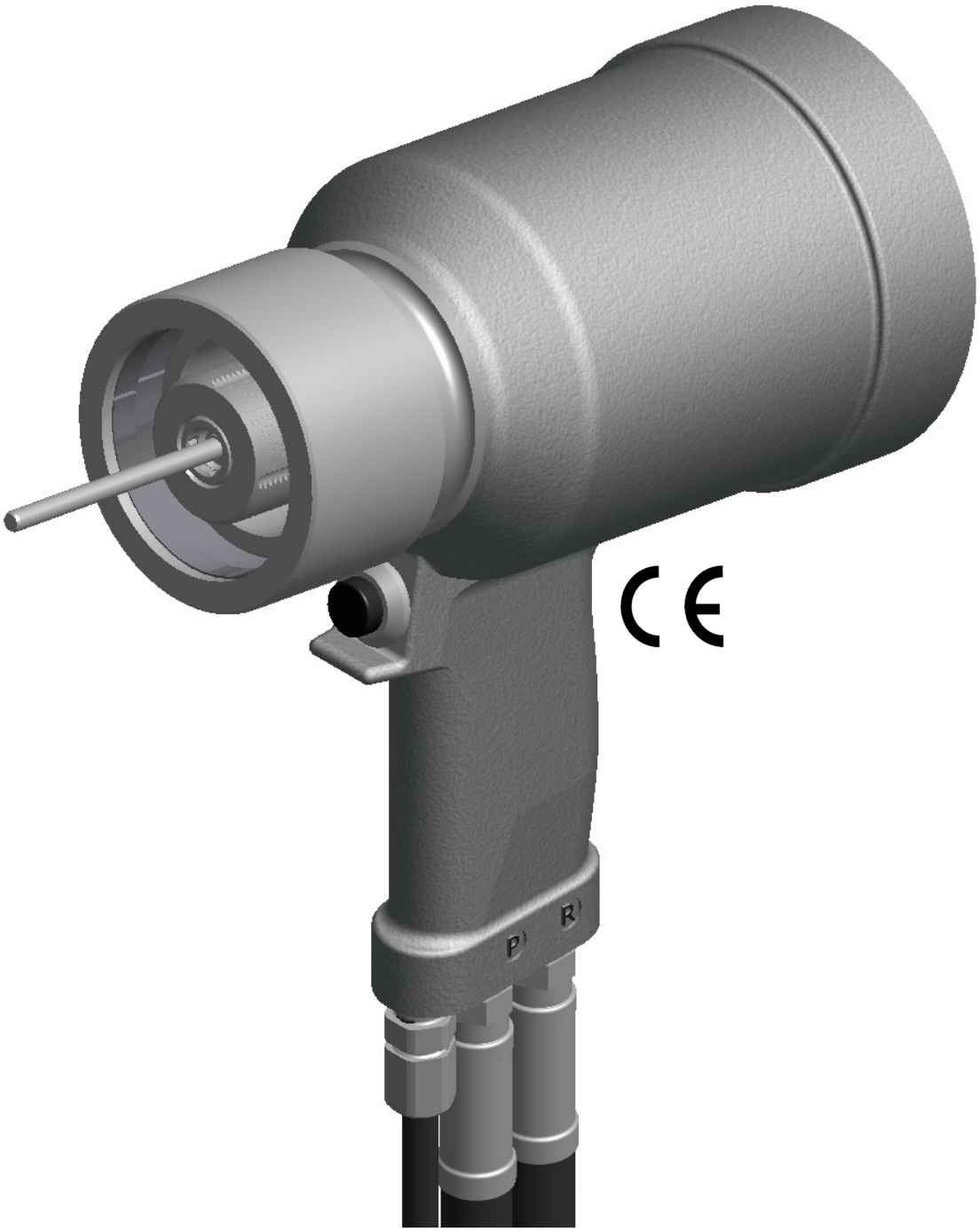

GAGE BILT TOOLS ARE AVAILABLE WORLDWIDE
E-MAIL US FOR A DISTRIBUTOR NEAR YOU.

GAGE BILT
MADE in USA

44766 Centre Court, Clinton Twp., MI. 48038 USA
Ph: +1 (586) 226-1500 Fax: +1 (586) 226-1505
solutions@gagebilt.com / www.gagebilt.com

TABLE OF CONTENTS

Page

EU Conformity and Warranty **3**

Description and Technical Specifications **4**

Description of Functions **5**

Safety Warnings **6**

Principle of Operation **7**

How to set-up the GB2628/GB2628A **8**

How to use the GB2628/GB2628A **9**

Maintenance and Hydraulic Thread Preparation **10**

Troubleshooting **11**

Overhaul **12**

Parts Lists GB2628 ..... **13**

Parts Lists GB2628A **14**

Nose Assembly Selection Chart **15**

Powerunits & Accessories **16-20**

GAGE BILT

DECLARATION OF CONFORMITY

MANUFACTURER: Gage Bilt Inc. 44766 Centre Ct., Clinton Twp., Michigan U.S.A. +1(586-226-1500)

WE DECLARE THAT THE EQUIPMENT SPECIFIED HEREIN CONFORMS TO THE FOLLOWING DIRECTIVES AND STANDARDS

Machinery Directive 2006/42/EC

EN12100-1 & EN12100-2

EN792-1:2000+A1

EU REPRESENTATIVE: Edgar Hausmann GmbH Förster-Busch-Str. 10 D-34346 Hann. Münden Germany

EQUIPMENT DESCRIPTION: GB2628(A) FASTENER INSTALLATION TOOL

This product specified above conforms to the above dIrectives and standards.

SIGNATURE:

NAME: TIM SIMMONS
PRODUCT MANAGER
CLINTON TWP., MI U.S.A.
OCT 2023
+1(586) 226-1500

UKCA

CE

WARRANTY

Seller warrants that all goods covered by this catalog will conform to applicable specifications and will replace or repair, EXW our plant, any goods providing defective from faulty workmanship, or material, for 1 year from date of shipment.

Said warranty to remain in effect if, and only if, such goods are used in accordance with all instructions as to maintenance, operation and use, set forth in manuals and instruction sheets furnished by seller.

Sellers obligation under this warranty shall be limited to the repair or rework of the goods supplied or replacement thereof, at Seller's option, and in no case is to exceed the invoice value of said goods. Under no circumstances will the seller be liable for incidental or consequential damages or for damages incurred by the buyer or subsequent user in repairing or replacing defective goods or if the goods covered by this warranty are reworked or subjected to any type of additional processing.

This warranty is void if Seller is not notified in writing of any rejections or defects within 1 year after the receipt of the material by the customer.

THIS WARRANTY IS MADE IN LIEU OF ALL OTHER WARRANTIES EXPRESSED OR IMPLIED, INCLUDING MERCHANTABILITY.

DESCRIPTION

⚠ **WARNING: Any other use is forbidden.**

The GB2628 is a hydraulic installation tool capable of installing 1/2", 5/8" & 3/4" lockbolts and 12mm & 16mm MHP 10.9 lockbolts.

It weighs 20.8 lbs. (9.43 kg) and can be operated in any position. It has a 1.812" (46 mm) fastener setting stroke and a rated pull load of 45,769 lbs. (203.58 kN) @ 7,400 psi. (510.2 bar).

The GB2628 electric actuated installation tool operates on hydraulic pressure developed by the GB947 or equivalent power unit set at 7,400 psi (510.2 bar) maximum PULL pressure and 3,200 psi. (220.6 bar) maximum RETURN pressure. The tool comes equipped with 2 feet (.61 m) of hydraulic hoses and couplings, electric actuator and cord.

The GB2628A air actuated installation tool operates on hydraulic pressure developed by the GB910, GB912 or equivalent power unit set at 7,400 psi (510.2 bar) maximum PULL pressure and 3,200 psi. (220.6 bar) maximum RETURN pressure. The tool comes equipped with 2 feet (.61 m) of hydraulic hoses, swivels and couplings, air actuator and tube.

ALL GAGE BILT HYDRAULIC INSTALLATION TOOLS ARE COMPATABLE WITH HUCK® POWERUNITS. NOSE ASSEMBLIES ARE NOT FURNISHED WITH THESE TOOLS AND MUST BE ORDERED SEPARATELY.

ENVIRONMENTAL USE

⚠ **WARNING: Do not operate in an explosive atmosphere.**

The GB2628 and GB2628A can be operated between 0ºF — 118ºF (-17.8ºC/47.8ºC)

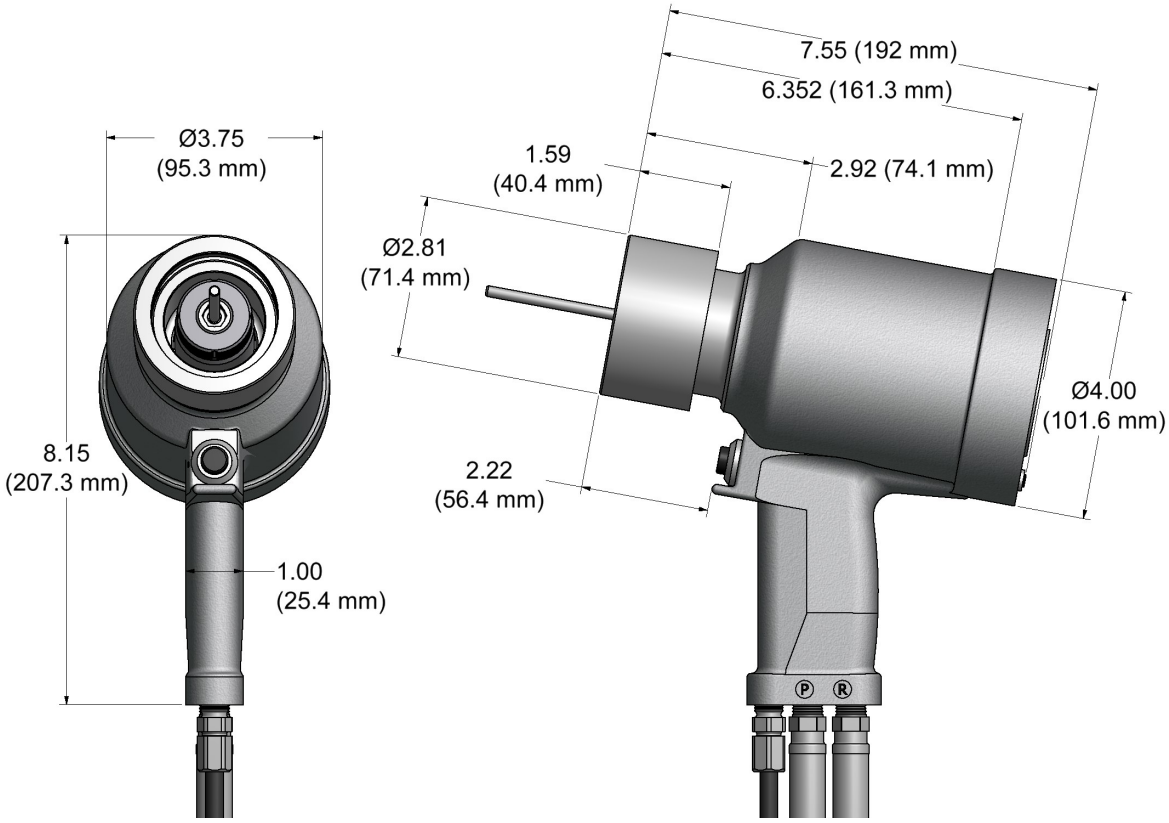

TECHNICAL SPECIFICATIONS

Weight	-	**20.8 lbs. (9.43 kg)**
Hyd. pressure req'd	-	**7,400 psi (510.2 bar) PULL**
	-	**3.200 psi (220.6 bar) RETURN**
Hyd. Power Source	-	**GB947 Powerunit or equivalent**
	-	**GB910 or GB912 Powerunit or equivalent**
Hydraulic Oil	-	**See power unit for Hydraulic Oil specifications**
Setting stroke	-	**1.812” (46mm)**
Rated pull load	-	**45,769 lbs. (203.59 kN) @ 7,400 psi (210.2 bar)**
Noise level	-	**No noise hazards identified. (20 max dB(A)**
Vibration	-	**Tested – No vibration hazards.**
Max Flow Rate	-	**2 gpm (76L/M)**
Max Inlet Temperature	-	**118º F (47.8º C)**

GB2628

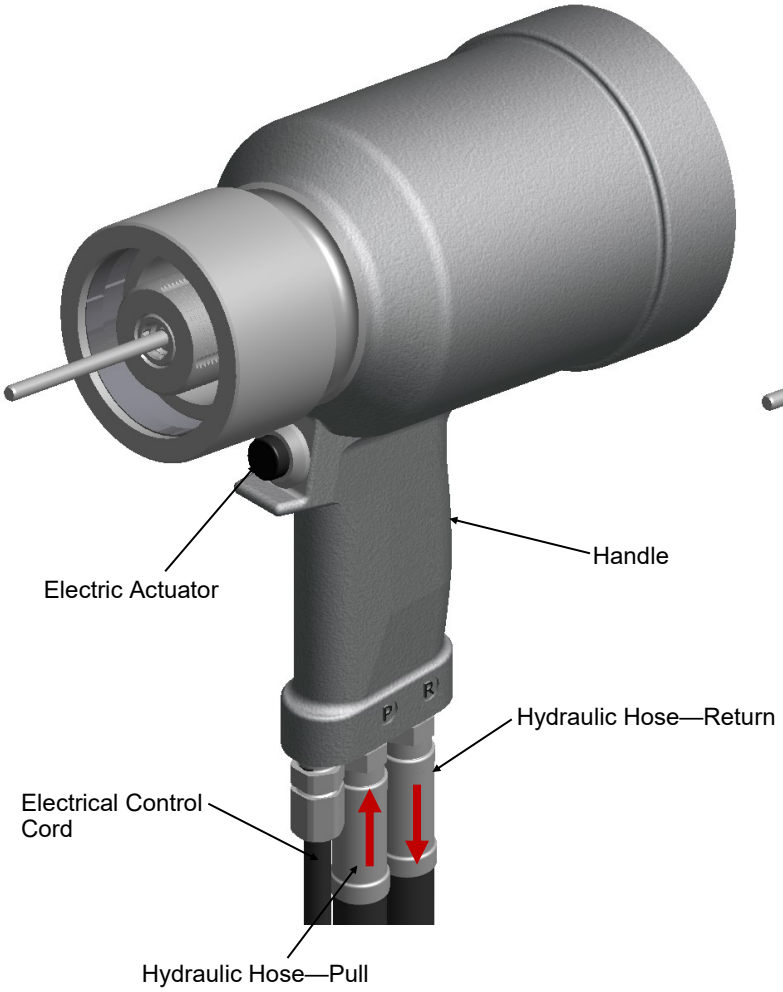

GB2628A

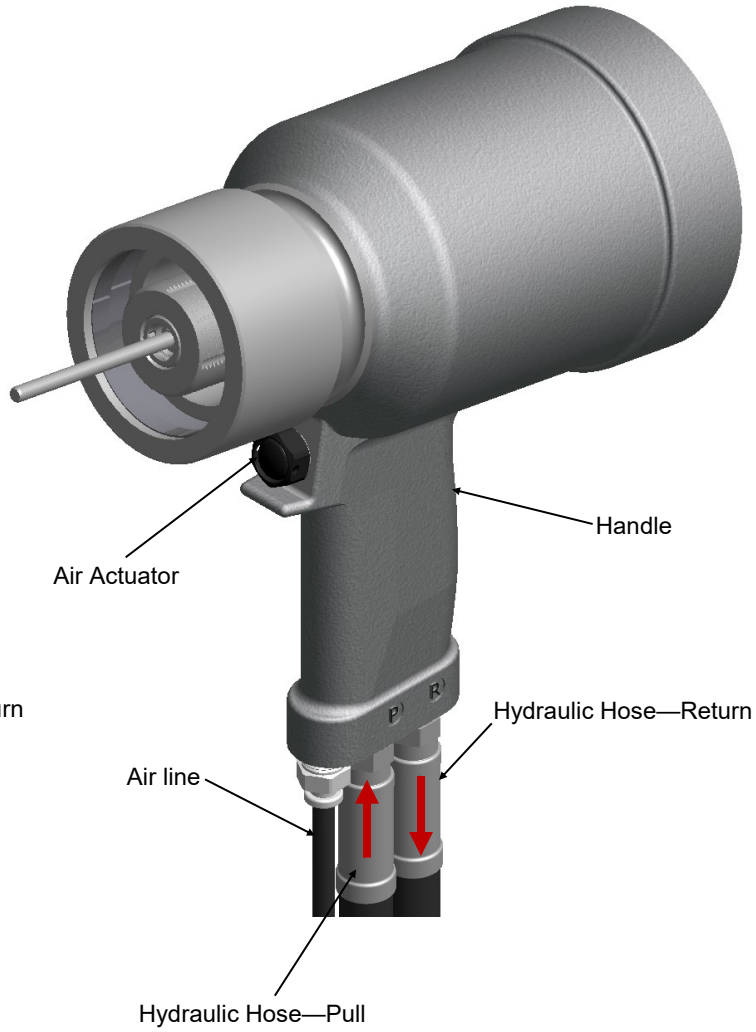

SAFETY WARNINGS

TERMS AND SYMBOLS

- Product complies with requirements

- Product complies with requirements

- Hearing protection and eye protection

- Read manual prior to using equipment

- Wear safety boots

WARNINGS - Must be understood to avoid severe personal injury.

CAUTIONS - show conditions that will damage equipment and/or structure.

Notes - are reminders of required procedures.

GENERAL SAFETY RULES:

1. For multiple hazards, read and understand the safety instructions before installing, operating, repairing, maintaining, changing accessories on, or working near the assembly power tool for non-threaded mechanical fasteners.
2. Only qualified and trained operators shall install, adjust or use the assembly power tool for non threaded mechanical fasteners.
3. Do not modify this assembly power tool for non-threaded mechanical fasteners. Modifications can reduce effectiveness of safety measures and increase the risks to the operator.
4. Do not discard safety instructions; give them to the operator.
5. Do not use assembly power tool for non-threaded mechanical fasteners if it has been damaged.
6. Tools shall be inspected monthly to verify all ratings and markings required are legible. The employer/user shall contact the manufacturer to obtain replacement marking labels when necessary.

ADDITIONAL SAFETY RULES FOR PNEUDRAULIC POWER TOOLS:

1. Air under pressure can cause severe injury.
2. Always shut off air supply, drain hose of air pressure and disconnect tool from air supply when not in use, before changing accessories or when making repairs.
3. Never direct air at yourself or anyone else.
4. Whipping hoses can cause severe injury. Always check for damage or loose hoses and fittings.
5. Cold air shall be directed away from hands.
6. Whenever universal twist couplings (claw couplings) are used, lock pins shall be installed and whip check safety cables shall be used to safeguard against possible hose-to-tool or hose-to-hose connection failure.
7. Do not exceed the maximum air pressure stated on the tool or manual.
8. Never carry an air tool by the hose.

PROJECTILE HAZARDS:

1. Disconnect the tool from the energy source when changing inserted tools/nose assemblies or accessories.
2. Be aware that failure of the workpiece, accessories, or the inserted tool/nose assembly itself can generate high-velocity projectiles.
3. Always wear impact resistant eye protection during operation of the tool.
4. Ensure that the workpiece is securely fixed.
5. Check that the means of protection from ejection of fastener and/or stem is in place and operative (such as the deflector, pintail collection bottle or catcher bag).
6. Forcible ejection of the mandrel from the front of the nose assembly is possible.

OPERATING HAZARDS:

1. Use of tool can expose the operator's hands to hazards, including crushing, impacts, cuts, abrasions and heat. Wear suitable gloves to protect hands.
2. Operators and maintenance personnel shall be physically able to handle the bulk, weight and power of the tool.
3. Hold the tool correctly; be ready to counteract normal or sudden movements and have both hands available.
4. Maintain a balanced body position and secure footing.
5. Release the start-and-stop device in the case of interruption of energy supply.
6. Use only lubricants recommended by the manufacturer.
7. Avoid unsuitable postures as it is likely for these positions not to allow counteracting of normal or unexpected movement of the tool.
8. If the tool is fixed to a suspension device, make sure that fixation is secure.
9. Beware of the risk of crushing or pinching if nose equipment is not fitted.
10. Due to the tool weight, it is recommended safety shoes be worn during operation.
11. It is recommended tool be operated not more than 50 out of every 60 minutes, where prolonged use is expected.

REPETITIVE MOTIONS HAZARDS:

1. When using the tool, the operator can experience discomfort in the hands, arms, shoulders, neck or other parts of the body.
2. While using the tool, the operator should adopt a comfortable posture while maintaining a secure footing and avoiding awkward or off balanced postures. The operator should change posture during extended tasks; this can help avoid discomfort and fatigue.
3. If the operator experiences symptoms such as persistent or recurring discomfort, pain, throbbing, aching, tingling, numbness, burning sensations or stiffness, these warning signs should not be ignored. The operator should tell the employer and consult a qualified health professional.

ACCESSORY HAZARDS:

1. Disconnect tool from energy supply before changing the nose assembly or accessory.
2. Use only sizes and types of accessories approved by the manufacturer. Do not use other types or sizes of accessories.

WORKPLACE HAZARDS:

1. Slips, trips and falls are major causes of workplace injury. Be aware of slippery surfaces caused by use of tool and also of trip hazards caused by the air line or hydraulic hose.
2. Proceed with care in unfamiliar surroundings. There could be hidden hazards, such as electricity or other utility lines.
3. The tool is not intended for use in potentially explosive atmospheres and is not insulated against contact with electrical power.
4. Ensure that there are no electrical cables, gas pipes, etc., which can cause a hazard if damaged by the tool.

NOISE HAZARDS:

1. Exposure to high noise levels can cause permanent, disabling hearing loss and other problems, such as tinnitus (ringing, buzzing, whistling or humming in the ears). Therefore, risk assessment and the implementation of appropriate controls for these hazards are essential.
2. Appropriate controls to reduce the risk may include actions such as damping materials to prevent workpieces from "ringing".
3. Always use hearing protection.
4. Operate and maintain the assembly power tool for non-threaded mechanical fasteners as recommended in the instruction handbook, to prevent an unnecessary increase in the noise level.
5. Select, maintain and replace the consumable/inserted tool as recommended in the instruction handbook, to prevent an unnecessary increase in noise.
6. If the power tool has a silencer, always ensure that it is in place and in good working order when the power tool is being operated.

VIBRATION HAZARDS:

1. Exposure to vibration can cause disabling damage to the nerves and blood supply of the hands and arms.
2. Wear warm clothing when working in cold conditions and keep your hands warm and dry.
3. If you experience numbness, tingling, pain or whitening of the skin in your fingers or hands, stop using the assembly power tool for non-threaded mechanical fasteners, tell your employer and consult a physician.
4. Support the weight of the tool in a stand, tensioner or balancer, because a lighter grip can then be used to support the tool.

PRINCIPLE OF OPERATION

When the tool is connected to a hydraulic powerunit, operation is controlled by an electric actuator (240122) (GB2628) or a piloted air actuator (240123) (GB2628A) in the handle. When the actuator is depressed, a directional valve in the hydraulic powerunit directs oil to the front side of the piston forcing it and the internal component in the nose assembly rear-ward. This action causes the jaws to clamp onto the fastener pintail and pull the sheets together. The anvil is forced forward, swaging the collar into locking grooves of the fastener. Further force breaks the pintail off, approximately flush with the collar. When the piston is in the rear position flats are exposed unloading the pressurized oil.

When the actuator is released, the directional valve directs the oil to the back of the piston pushing the nose assembly off of the swaged fastener. The pintail ejector hydraulically pushes the spent pintail out of the nose assembly. When the piston is full forward pressure is built shutting of the hydraulic powerunit.

HYDRAULIC DIAGRAM

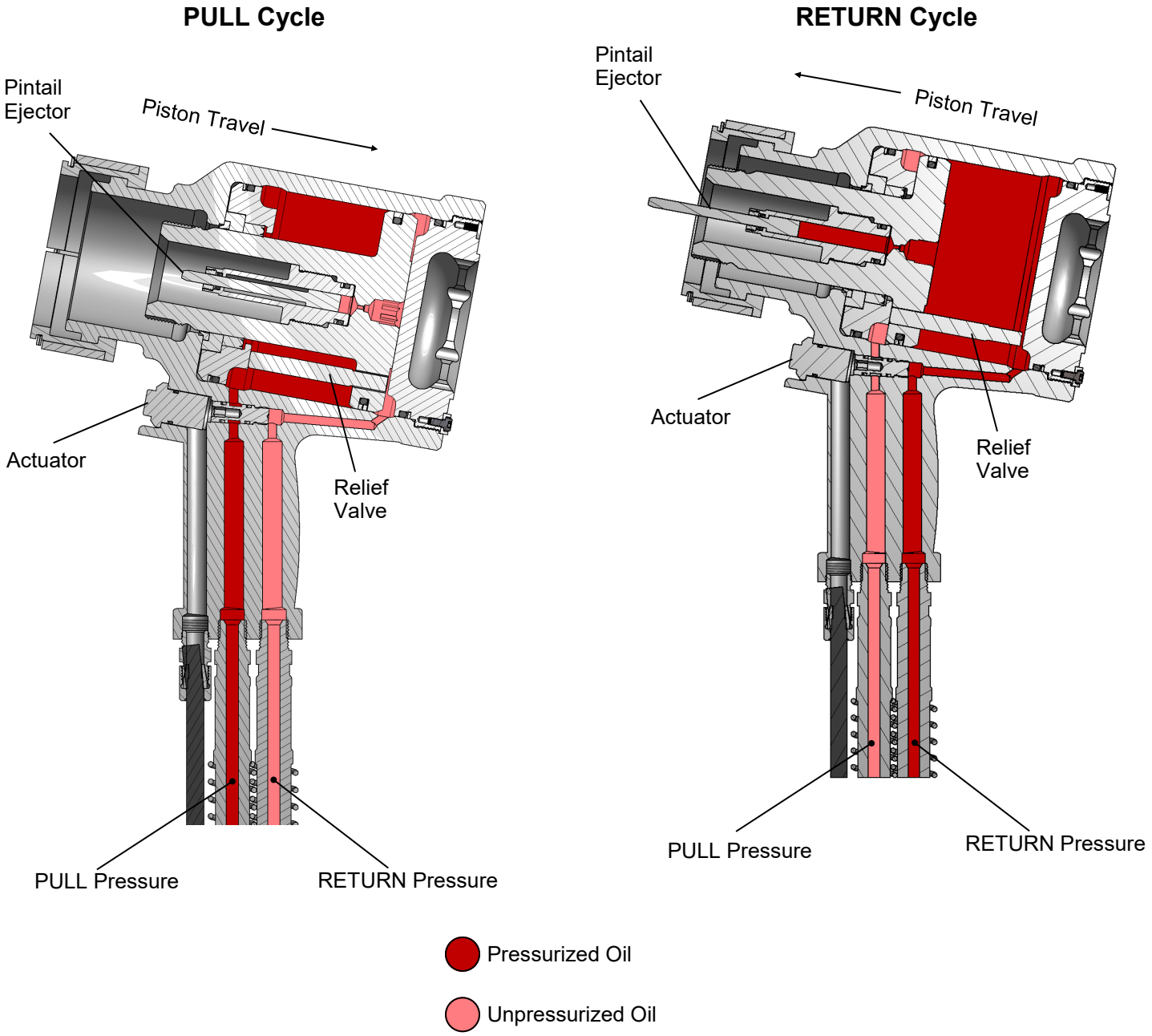

Image may not reflect actual tool

HOW TO SET-UP THE GB2628 / GB2628A

WARNING: Only qualified and trained operators should install, adjust or use the assembly power tool for non-threaded mechanical fasteners.

WARNING: Operator MUST read and understand all warnings and cautions.

WARNING: It is required that eye protection, hearing protection and safety boots be worn at all times while handling this equipment.

WARNING: The users or the user's employer should assess specific risks that could be present before each use based on their application.

- Be sure there is adequate clearance for tool and operator's hands before proceeding. Keep fingers clear of any moving parts. Keep fingers clear from fasteners and installed materials. Severe personal injury may result.
- *Verify the air lines and/or hydraulic hoses are not a trip hazard.*
- *Ensure that there are no electrical cables, gas pipes, etc., which can cause a hazard if damaged by the tool.*
- *Verify that hydraulic hose fittings and couplings, air and electrical connections are secure before each use.*

WARNING: Do not pull fastener in the air. Personal injury from fastener ejecting may occur.

WARNING: Do not carry from hoses or use as a hammer.

WARNING: Do not use in explosive atmosphere.

WARNING: Ensure air hose is securely connected to avoid possible hose whipping.

WARNING: Always disconnect air supply, where applicable, when tool is not in use to prevent accidental start-up.

WARNING: Do not exceed the maximum relief-valve setting stated on the tool and manual.

WARNING: Do not operate when recommended pressures are exceeded as it could cause severe personal injury and or damage the equipment.

WARNING: Use only Gage Bilt hydraulic hoses and couplings, or equivalent, rated for 10,000 psi. (689.5 bar) working pressure.

WARNING: Do not operate this tool without deflector, pintail catcher bag or pintail collection bottle in place.

CAUTION: Do not use beyond the design intent.

CAUTION: The use of Suspension Bracket assembly (A-1594) is strongly recommended as it increases ergonomic flexibility and reduces fatigue for users while installing fasteners.

1. Set hydraulic power unit to the recommended pressure, 7,400 psi (510.2bar) Max. for the pull and 3,200 psi (220.6 bar) Max. for the return. Gage Bilt pressure gage assembly (942280) (sold separately) is recommended to aid in this procedure. "See hydraulic power unit manual for correct procedure when adjusting pressures".

7,400 psi (510.2 bar) Max. for the pull		3,200 psi (220.6 bar) Max. for the return	

***Note**: Power units require a free flow of air for cooling purposes and should therefore be positioned in a well ventilated area free from hazardous fumes.*

2. Turn off the hydraulic power unit. Wipe all couplers clean before connecting. Failure to do so can result in damage to the couplers and cause overheating. Connect hydraulic hoses then electric cord to power supply.

3. Turn hydraulic power unit on and cycle tool five times by depressing actuator to ensure piston is in the full forward position.

4. Disconnect electric cord / air line from power supply.

5. Attach nose assembly:

   5a. Screw collet assembly onto piston until top of collet flat lines up with top of tool.

   5b. If collet lock is not in piston groove, continue to turn 1/4 turn clockwise until ball lock engages in groove.

   5c. Tighten set screw.

   5d. Slide anvil over assembled collet. While pushing down on anvil, install split ring, sleeve and retaining ring (furnished with tool).

   (See proper data sheet for further instructions).

6. Re-connect electric cord / air line into power supply.

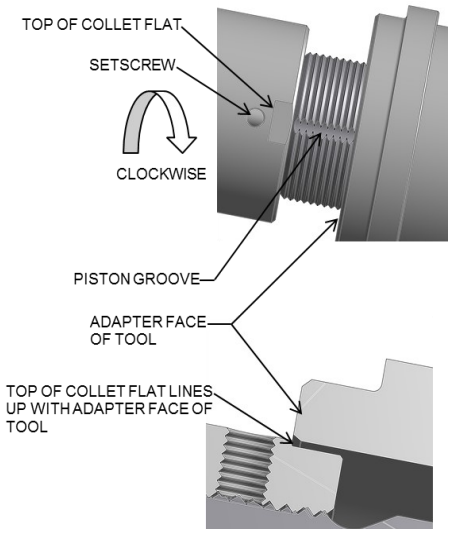

Note: See GB7624 NOSE ASSEMBLY ATTACHMENT video as reference for proper nose assembly attachment procedure located on our website, at : http://www.gagebilt.com/rivet_tools_videos.php

HOW TO USE THE GB2628 / GB2628A

⚠ **WARNING:** Only qualified and trained operators should install, adjust or use the assembly power tool for non-threaded mechanical fasteners.

⚠ **WARNING:** Operator **MUST** read and understand all warnings and cautions.

⚠ **WARNING:** It is required that eye protection, hearing protection and safety boots be worn at all times while handling this equipment.

⚠ **WARNING:** The users or the user's employer should assess specific risks that could be present before each use based on their application.

- Be sure there is adequate clearance for tool and operator's hands before proceeding. Keep fingers clear of any moving parts. Keep fingers clear from fasteners and installed materials. Severe personal injury may result.
- *Verify the air lines and/or hydraulic hoses are not a trip hazard.*
- *Ensure that there are no electrical cables, gas pipes, etc., which can cause a hazard if damaged by the tool.*
- *Verify that hydraulic hose fittings and couplings, air and electrical connections are secure before each use.*

⚠ **WARNING:** Do not pull fastener in the air. Personal injury from fastener ejecting may occur.

⚠ **WARNING:** Do not carry from hoses or use as a hammer.

⚠ **WARNING:** Do not use in explosive atmosphere.

⚠ **WARNING:** Ensure air hose is securely connected to avoid possible hose whipping.

⚠ **WARNING:** Always disconnect air supply, where applicable, when tool is not in use to prevent accidental start-up.

⚠ **WARNING:** Do not exceed the maximum relief-valve setting stated on the tool and manual.

⚠ **WARNING:** Do not operate when recommended pressures are exceeded as it could cause severe personal injury and or damage the equipment.

⚠ **WARNING:** Use only Gage Bilt hydraulic hoses and couplings, or equivalent, rated for 10,000 psi. (689.5 bar) working pressure.

⚠ **WARNING:** Do not operate this tool without deflector, pintail catcher bag or pintail collection bottle in place.

⚠ **CAUTION:** Do not use beyond the design intent.

⚠ **CAUTION:** The use of Suspension Bracket assembly (A-1594) is strongly recommended as it increases ergonomic flexibility and reduces fatigue for users while installing fasteners.

Lockbolts

1. Insert fastener through the work piece.

2. Slide collar over fastener.

Note: Always hold tool so pulling head is perpendicular to surface of material in which fastener is being installed. Exert firm pressure against fastener during installation.

3. Insert fastener into nose assembly.

4. Press actuator to start cycle.

5. Release actuator as soon as fastener breaks.

6. Repeat steps 1 - 5.

Images may not reflect actual tool or fastener

DAILY MAINTENANCE

⚠ **WARNING:** Tool must be maintained in a safe working condition at all times and examined on a daily basis for damage or wear. Any repair should be done by qualified personnel trained on Gage Bilt procedures.

⚠ **WARNING:** Excessive contact with hydraulic oil and lubricants should be avoided.

⚠ **WARNING:** Maintenance personnel MUST read and understand all warnings and cautions.

⚠ **WARNING:** Disconnect tool from its power source before performing maintenance, cleaning or when replacing worn or damaged components. Severe personal injury may occur if power source is not disconnected.

⚠ **WARNING:** Read SDS documents for all applicable materials.

Note:

- Dispose of hydraulic oil in accordance with manufacture safety datasheet.
- All tool materials are recyclable except rubber o'rings, seals and wipers.

The performance of any tool depends upon good maintenance practices. Following these minimal requirements daily will extend the life of your tool.

*Check tool and nose assembly for damage. (Replace/Repair if necessary). See Overhaul pg. 12 for tool repair.

*Inspect all hoses and couplings for wear, damage and leaks. Replace/Repair if necessary. (*See hydraulic thread preparation below)*.

*Verify that hydraulic hose fittings and couplings, air and electrical connections are secure. Tighten, Replace or Repair if necessary (*See hydraulic thread preparation below)*.

*Cycle the tool several times to assure there are no leaks during use.

*Only use a hydraulic power source equipped with relief valves and pressures set within specific limits. (See required max pressure for pull and return).

* Keep hydraulic system free of dirt. Avoid letting couplers contact a dirty floor.

* Do not use as a hammer to force fasteners into holes or otherwise abuse tool.

* Proper care by operators is necessary in maintaining full productivity and reducing downtime.

*Keep nose assemblies, especially jaws, clean and free of chips and debris. Lube jaws and collet surfaces that jaws ride on with light machine oil on a daily basis.

*All Screwed End Caps, Base Covers, Air Fittings, Air Actuators, Screws and Nose Assemblies are to be examined at the end of each working shift to check that they are secure.

SEE TROUBLESHOOTING (PG. 11) AND OVERHAUL (PG. 12) FOR FURTHER GUIDANCE.

CLEANING AND LUBRICATING PROCEDURE

Daily cleaning and lubrication of nose assembly will greatly reduce downtime and increase life of components. Using sewing machine oil, or an equivalent cleaner/lubricant, follow instructions below.

CLEANING

Clean nose assembly daily or as often as needed.

1. Dip into mineral spirits or similar solvent to clean jaws and wash away metal chips and debris. DO NOT allow jaws to come in contact with other solvents. DO NOT let jaws soak. Dry jaws immediately.
2. Disassemble nose assembly and use a sharp "pick" to remove embedded particles from grooves of jaws. remove embedded particles from grooves of jaws.

LUBRICATING

Lubricate nose assembly after each cleaning and as often as needed.

1. Disconnect tool vacuum line (if equipped).
2. Point nose assembly into oil as shown.
3. Cycle tool 8 - 10 times and wipe dry.

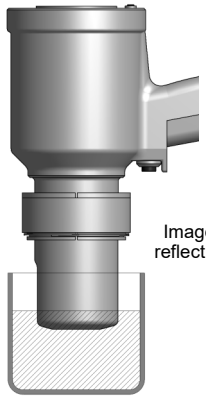

Image may not reflect actual tool

HYDRAULIC THREAD PREPARATION

IMPORTANT: **Be sure to use thread sealant on all hydraulic fittings, Loctite® 545 or equivalent or a non-hardening Teflon® thread compound such as Slic-tite®. Tighten until fitting feels snug and then continue to tighten 1/2 to 1 full turn.** ***CAUTION:*** **Over tightening can easily distort the threads. DO NOT USE TEFLON® TAPE.** ***CAUTION:*** **Teflon® tape is an excellent thread sealer, however, if it is not properly applied, pieces of Teflon® may enter the hydraulic system and cause malfunction or damage.**

TROUBLESHOOTING

Providing all maintenance conditions have been met, follow this systematic approach to diagnosis.

1. NO OPERATION WHEN ELECTRIC ACTUATOR (240122) / AIR ACTUATOR ASSEMBLY (240123) IS DEPRESSED.

a.) Check Powerunit power source.

b.) Control cord may be loose or damaged.

c.) Faulty electric actuator. Replace.

d.) Check hydraulic couplings; repair or replace.

2. SLOW OR PARTIAL OPERATION WHEN ELECTRIC ACTUATOR (240122) / AIR ACTUATOR ASSEMBLY (240123) IS DEPRESSED.

a.) Low hydraulic pressure. Check powerunit, adjust.

b.) Glyd Ring Assembly (262813) on the piston assembly (262806) could be worn or damaged. Replace.

c.) Excessive wear or scoring on moving parts. Check and replace faulty parts.

3. TOOL OPERATES IN REVERSE.

a.) Tool stops in back position. Hydraulic hoses are reversed. Correct.

4. HYDRAULIC OIL OVERHEATS.

a.) Powerunit motor rotation reversed. Electrical connections reversed. See powerunit instruction manual.

b.) Restrictions in either hydraulic lines, hoses or couplings. Check and tighten, clean or replace. (*See hydraulic thread preparation pg.10).*

5. OIL LEAKAGE.

a.) Hydraulic oil leaks from connections. Tighten threaded connections.

b.) Oil leaks from tool. Determine source of leak and replace worn or defective o'rings and back-up rings. (*See hydraulic thread preparation pg. 10).*

6. PINTAIL GROOVES STRIPPED DURING PULL STROKE.

a.) Nose Assembly must be pushed onto fastener fully.

b.) Chips may have collected in chuck jaws. Disassemble nose assembly, clean jaws in mineral spirits using a sharp pointed object.

c.) Chuck jaws may be worn or damaged. Replace.

d.) Pintail too short for jaws to properly grip. Select proper grip length fastener.

e.) Excessive gap between sheets. Reduce gap before attempting to install fastener.

7. NOSE ASSEMBLY WON'T ACCEPT FASTENER PINTAIL.

a.) Spent fastener stem may be jammed in pulling head. Disassemble and check for worn or broken parts in nose assembly. Replace defective parts and clean before reassembling.

b.) Verify Tool and Nose Assembly are correct for fastener.

OVERHAUL

⚠ WARNING: Only qualified and trained personnel shall perform overhaul.
⚠ WARNING: Personnel must read and understand all warnings and cautions.
⚠ WARNING: Tool must be maintained in a safe working condition at all times and examined on a daily basis for damage or wear. Any repair must be done by qualified personnel trained on Gage Bilt procedures.
⚠ WARNING: Disconnect tool from its power source before performing overhaul. Severe personal injury may occur if power source is not disconnected.
⚠ WARNING: Excessive contact with hydraulic oil and lubricants should be avoided. (See safety data sheet documents for all applicable materials).
⚠ WARNING: When operating, repairing or overhauling tool, wear approved eye protection. Do not look in front of tool or rear of tool when installing fastener.
⚠ WARNING: Use only Gage Bilt hydraulic hoses and couplings, or equivalent, rated for 10,000 psi. (689.5 bar) working pressure.
⚠ WARNING: Ensure air hose is securely connected to avoid possible hose whipping. (Air Actuated Tools only).
⚠ WARNING: Do not exceed the maximum relief-valve setting stated on the tool and manual.
⚠ WARNING: Relief valve must be installed with four flats towards the rear of the cylinder.

Note:

- **Dispose of hydraulic oil in accordance with manufacture safety datasheet.**
- **All tool materials are recyclable except rubber o'rings, seals and wipers.**
- ***Use of SERVICE KIT (GB2628KS), which contains a complete set of o'rings, back-up rings and screws, can achieve a complete overhaul.***

Perform overhaul in a clean, well lit area using care not to scratch or nick any smooth surface that comes in contact with an o'ring. Use of Lubriplate® #630-AA (Gage Bilt part no. 402723) or equivalent during reassembly to prevent tearing or distorting of o'rings.

1. **Disconnect control cord assembly (585034) / air line (750154) from power supply.**
2. **Disconnect hydraulic hose assembly (585054) power supply.**
3. **Remove hydraulic coupler-male (585047) & hydraulic coupler-female (585038) from hydraulic hose assembly (585054) and drain into a container.**
4. **Remove retaining sleeve (505024), split ring set (585002) and nose assembly.**
5. **Push piston assembly (262806) rearward until remaining hydraulic oil is drained.**
6. **Remove end cap (262815) using Hex Key (263020) supplied with tool.**
7. **Push piston assembly (262806) rearward until it is out of cylinder assembly (262808).**
8. **Remove front gland (262811), polyseal (407417), wiper housing (262807) and wiper (406001).**
9. **Remove all O'rings, Back-up rings, Wipers, Polyseals and Glyd Rings. Clean parts in mineral spirits or other o'ring compatible solvent being sure to clean o'ring grooves. Inspect components for scoring, excessive wear or damage.**
10. **Reassembly sequence is opposite of disassembly. Be sure relative positions of o'rings and back-up rings are as shown in exploded view and part list.**

Coat hose fitting threads with a non-hardening Teflon thread compound such as Slic-tite®. DO NOT USE TEFLON® TAPE. (*See hydraulic thread preparation pg. 10)*.

Apply hot glue to wire connections of the electric actuator (240122) to ensure wires DO NOT contact each other or handle assembly. (Electric actuated installation tool GB2628 only).

TOOL DISPOSAL

1. **When tool life is met, drain hydraulic oil from tool and dispose of the hydraulic oil in accordance with SDS datasheet.**
2. **Disassemble tool and remove all rubber o'rings, seals, wipers and hydraulic hoses. All tool materials are recyclable except rubber o'rings, seals, wipers and hydraulic hoses. Dispose of rubber materials in accordance with all environmental regulations applicable in your area.**

GB2628 PARTS LIST
(Electric Actuated)

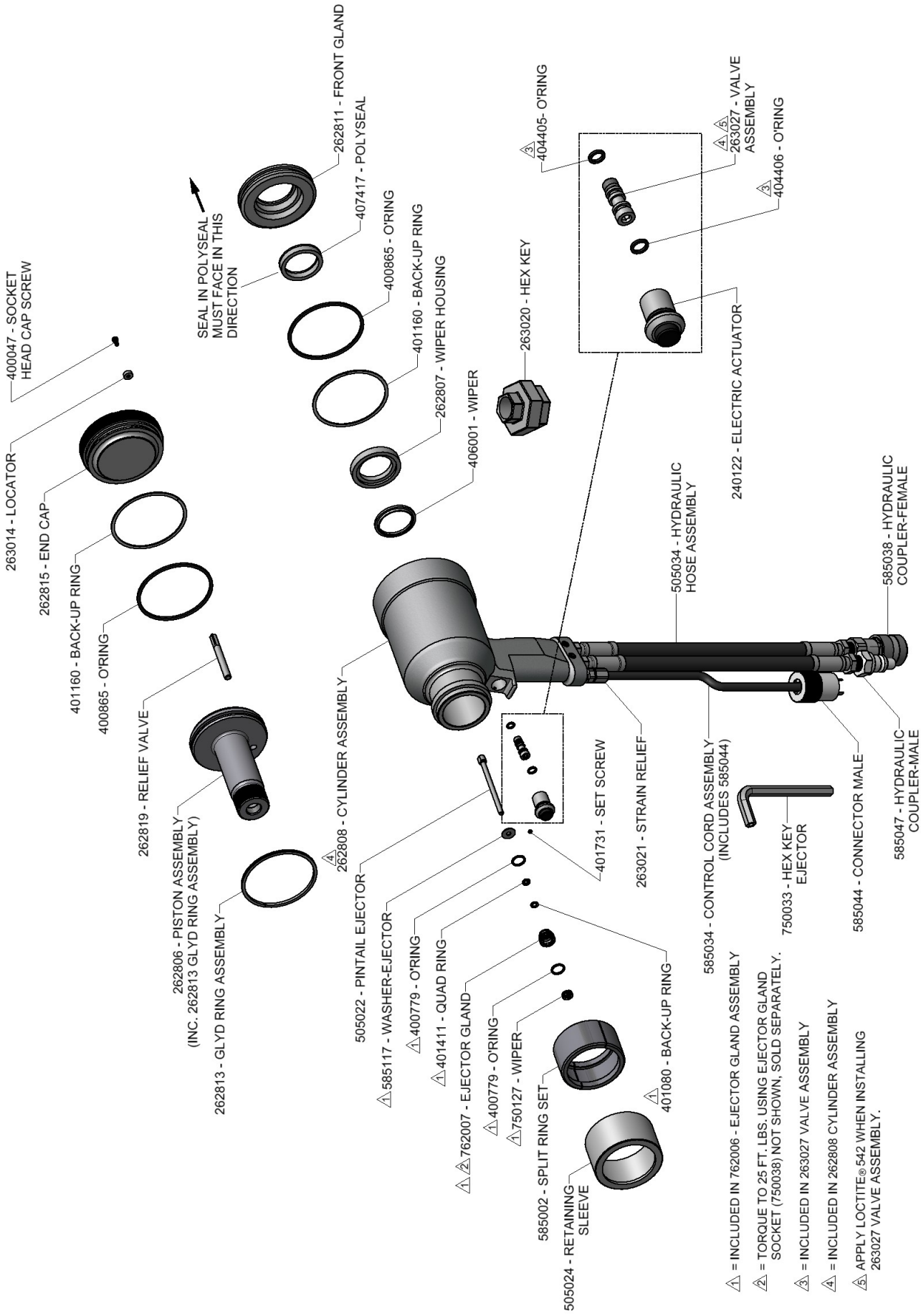

GB2628A PARTS LIST
(Air Actuated)

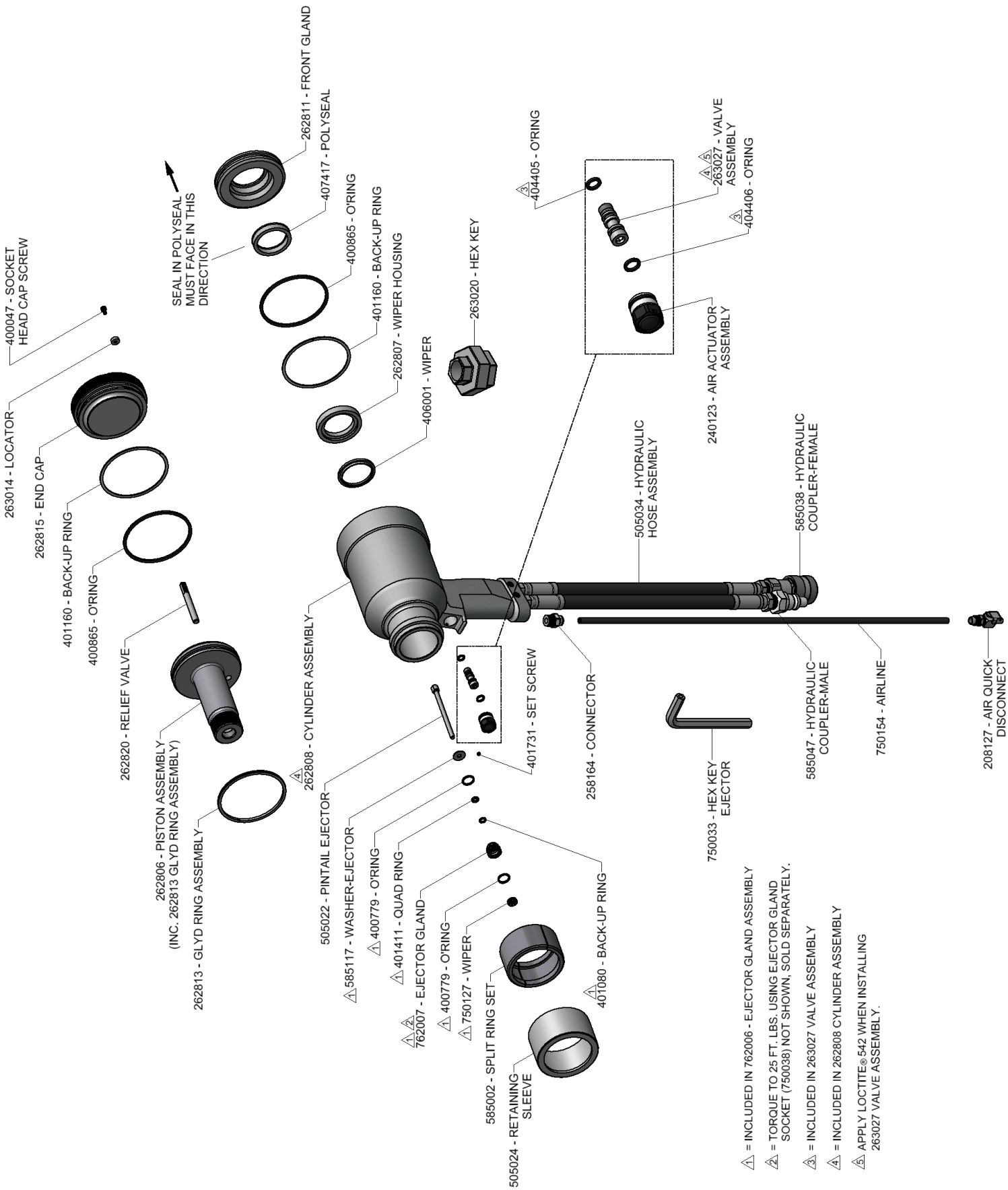

GB2628/GB2628(A) ACCESSORIES

Approved for use on Gage Bilt CE installation tools and/or other manufacturer's CE approved tools of similar design.
(Sold Separately)

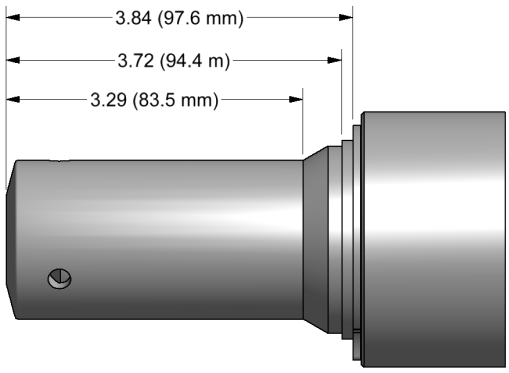

GB2628/GB2628A NOSE ASSEMBLY SELECTION CHART

(Sold Separately)

FASTENER	DIA.	NOSE ASSEMBLY
LOCKBOLT HIGH TENSILE PULL TYPE C50L® LD AVDELOK®	1/2" 5/8" 3/4"	16-7624-40 20-585-41 24-585-46
BOM® AVBOLT®	1/2" 5/8" 3/4"	BOM16-7624A-40 BOM20-585-41 BOM24-585-46
HP8	5/8" 3/4"	CONTACT GAGE BILT FOR YOUR REQUIREMENTS
HP10.9	16mm 20mm	CONTACT GAGE BILT FOR YOUR REQUIREMENTS

C50L® AND BOM® ARE REGISTERED TRADEMARKS OF HOWMET AEROSPACE. AVDELOK® AND AVBOLT® ARE REGISTERED TRADEMARKS OF AVDEL UK LIMITED

GAGE BILT CERTIFIES THE GB2628 WILL INSTALL THE ABOVE FASTENERS

See gagebilt.com/nose_assemblies.htm for nose assembly information (data sheets)

NOTE: THE LAST 2 DIGITS OF THE NOSE ASSEMBLY REPRESENTS THE LENGTH THE NOSE ASSEMBLY EXTENDS FROM THE TOOL. (I.e. -40 = 4.0 inches)

1/23

Powerunits Available

(Sold Separately)

GB947 POWERUNIT

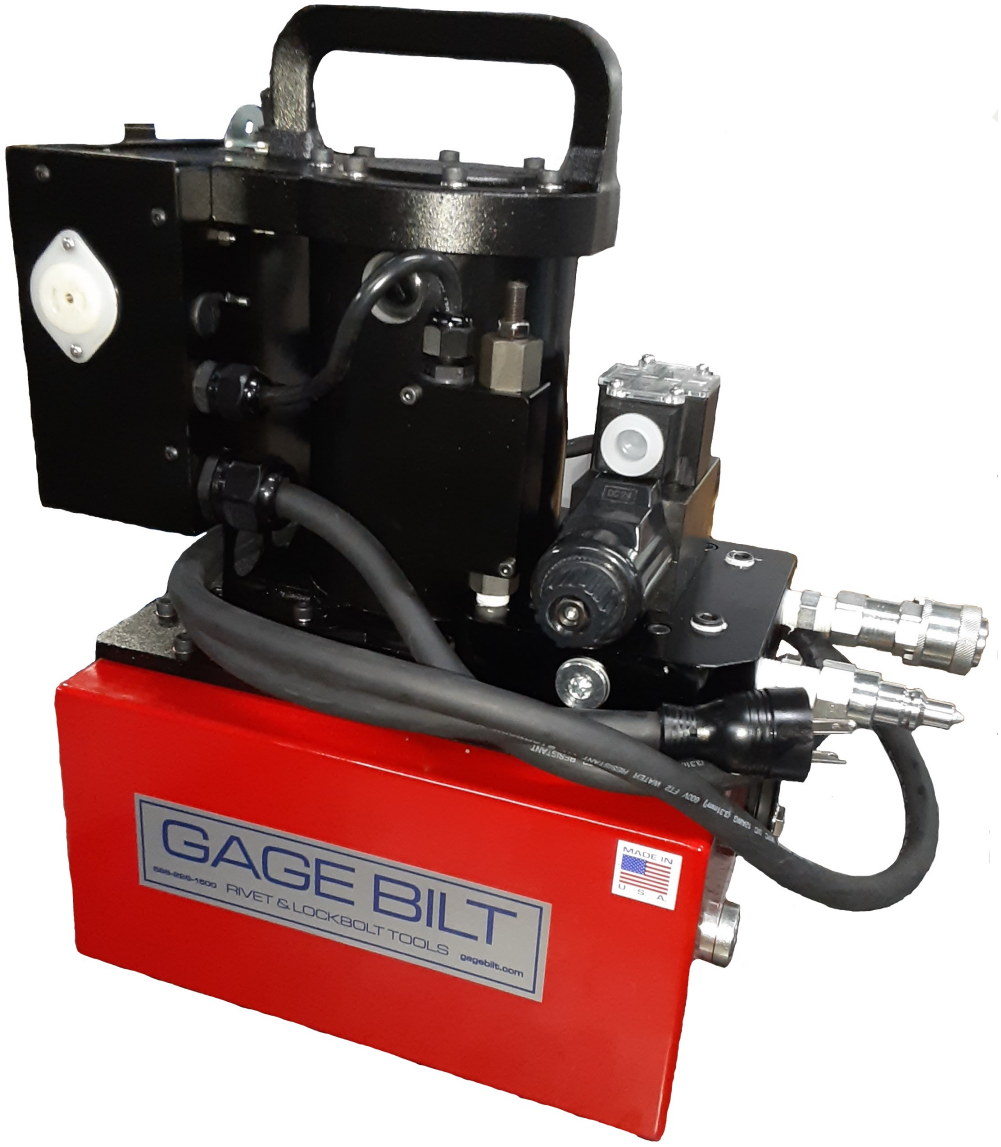

The GB947 Hydraulic Powerunit is a light-weight, portable power source designed to operate on a wide range of hydraulic installation tools. The unit is electrically powered and delivers up to 10,000 psi (689.48 bar) working pressure with simple adjustable hydraulic outputs. The 24 volt remote control circuit, in the installation equipment, controls the pump output directional valve. The GB947 Hydraulic Powerunit is available in 115 volt or 230* volt, single phase, alternating current. Output pressures as shipped are: PULL 5400-5700 psi, RETURN 2200-2400 psi.

The GB947 Hydraulic Powerunit is available separately or in kits including hydraulic quick-disconnect couplers, electrical connectors and hose cord kits in various lengths.

GB947-12 includes the GB947 and 12 ft. (3.7m) Hose Kit, part #940701
GB947-26 includes the GB947 and 26 ft. (7.9m) Hose Kit, part #940705
GB947-38 includes the GB947 and 38 ft. (11.6m) Hose Kit, part #940709
GB947-52 includes the GB947 and 52 ft. (15.8m) Hose Kit, part #940714

Image may not reflect actual tools

Powerunits Available

(Sold Separately)

GB910 POWERUNIT

Images may not reflect actual tools

The GB910 Hydraulic Powerunit is a portable power source designed to operate a wide range of hydraulic installation tools. The unit air powered, air actuated and delivers up to 10,000 psi (689.5 bar) working pressure. The actuator on the installation tool remotely controls the hydraulic oil directional flow. The unit consists of a two position air hydraulic pump, four way control valve and relief valve mounted on the reservoir.

The GB910 Hydraulic Powerunit is available separately or in kits including hydraulic quick-disconnect couplers, air connectors, air lines and hydraulic hoses in various lengths.

GB910-12 includes the GB910 and 12 ft. (3.7 m) Hose Kit-Air, part #910701

GB910-26 includes the GB910 and 26 ft. (7.9 m) Hose Kit-Air, part #910705

GB910-38 includes the GB910 and 38 ft. (11.6 m) Hose Kit-Air, part #910709

GB910-52 includes the GB910 and 52 ft. (15.8 m) Hose Kit-Air, part #910714

Powerunits Available

(Sold Separately)

GB912 & GB912-D HYDRAULIC POWERUNIT

(Sold Separately)

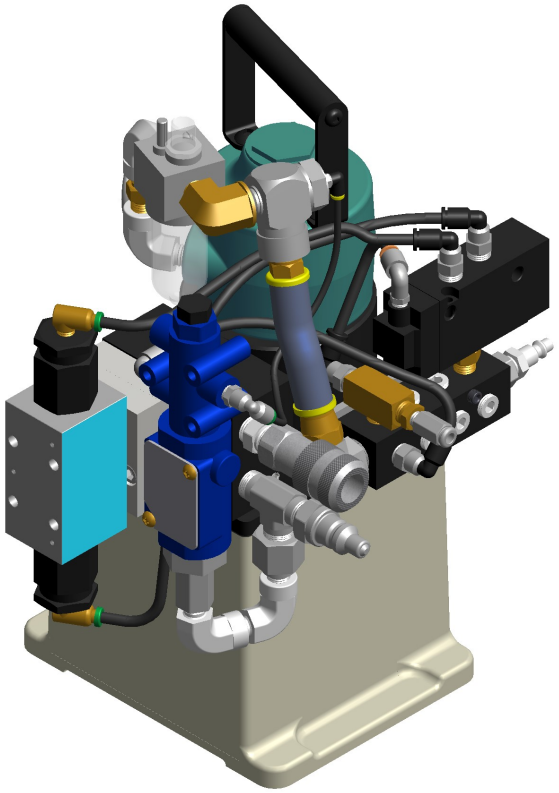

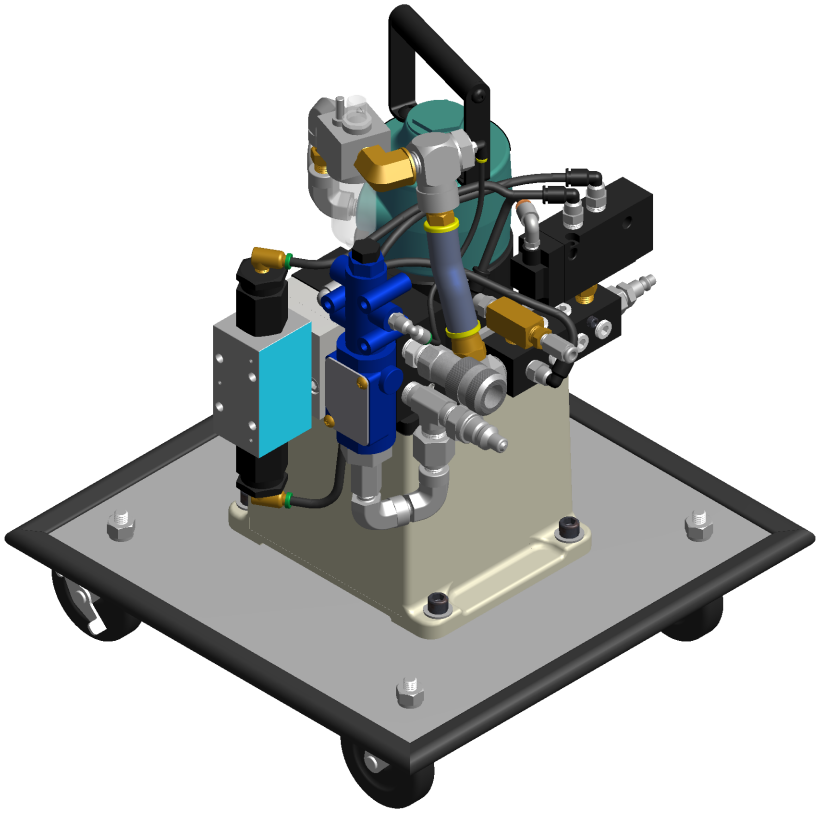

The GB912 Hydraulic Powerunit is a portable power source designed to operate a wide range of hydraulic installation tools. The unit air powered, air actuated and delivers up to 10,000 psi (689.5 bar) working pressure. The actuator on the installation tool remotely controls the hydraulic oil directional flow. The unit consists of a two position air hydraulic pump, four way control valve and relief valve mounted on the reservoir. The rapid tool piston movement is obtained through a higher (12 cubic inches a minute) output pump. Quick disconnect hydraulic couplings and air control socket are included to attach the equipment hydraulic hoses and air control tube.

The GB912 Hydraulic Powerunit is available separately or in kits including hydraulic quick-disconnect couplers, air connectors, air lines and hydraulic hoses in various lengths.

GB912-12 includes the GB912 Powerunit and 12 ft. (3.7 m) Hose Kit-Air, part #910701.
GB912-26 includes the GB912 Powerunit and 26 ft. (7.9 m) Hose Kit-Air, part #910705.
GB912-38 includes the GB912 Powerunit and 38 ft. (11.6 m) Hose Kit-Air, part #910709.
GB912-52 includes the GB912 Powerunit and 52 ft. (15.8 m) Hose Kit-Air, part #910714

Images may not reflect actual tool

This page intentionally left blank

Riveter Kits Available
(Sold Separately)

Gage Bilt offers a wide selection of standard and custom kits tailored to your needs.

Suspension Bracket
(Sold Separately)

⚠ **WARNING: See repetitive motions hazards (pg. 6)**

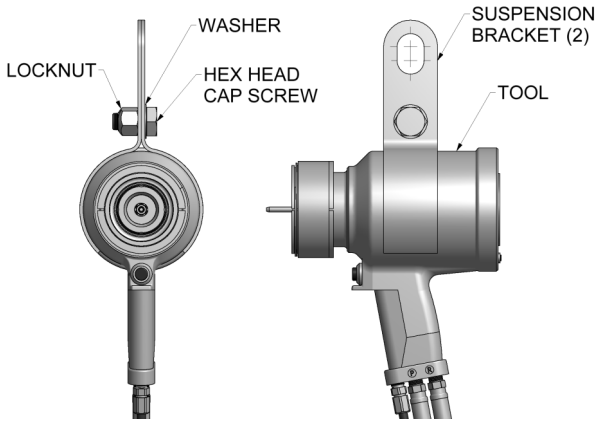

The use of suspension bracket Assembly (A-1594) is strongly recommended as it increases ergonomic flexibility and reduces fatigue for users while installing fasteners.

Suspension Bracket Assembly (A-1594) contains the bracket and hardware as shown in the figure.

Image may not reflect actual tool

TEFLON® IS A REGISTERED TRADEMARK OF E.I. DUPONT DE NEMOURS & CO. LUBRIPLATE® IS A REGISTERED TRADEMARK OF FISKE BROTHERS REFINING CO. SLIC-TITE® IS A REGISTERED TRADEMARK OF LA-CO INDUSTRIES INC. LOCTITE® IS A REGISTERED TRADEMARK OF HENKEL CORPORATION. HUCK® IS A REGISTERED TRADEMARK OF HOWMET AEROSPACE.